Greenchef®

High Quality Innovative Home and Kitchen Appiances

Product Catalogue

2026-27




Greenchef®
Pressure Cookers
Built for speed, safety, and taste — Greenchef Pressure Cookers make everyday cooking faster, easier, and more nutritious.

Stainless Steel Series

Gas & Induction Compatible
ISI Certified
Prevents Burning & Sticking of Food
Sandwitch Bottom
Tapered Handle
Aesthetic Design
ISO Certified Company

5 year warranty



Classic Stainless Steel Cooker 2 in 1 Combo

3 L + 2 L Pressure Pan

SKU	MRP
5516	₹3835

5 year warranty



Classic Stainless Steel Cooker 5 L

Capacity	SKU	MRP
5 L	5038	₹3555
10 L	5107	₹6349
7.5 L	5106	₹5559
3 L	5037	₹2665
2 L	5060	₹2335

5 year warranty



Classic Stainless Steel Cooker 5 L Combo

5 L + 3 L Pressure Pan with Glass Lid

SKU	MRP
5517	₹5390

5 year warranty



Classic Stainless Steel Cooker Inner Lid 5 L

Capacity	SKU	MRP
5 L	5063	₹4070
3 L	5062	₹3145
2 L	5061	₹2715

5 year warranty



Compact Prime Stainless Steel Cooker 3 L

Capacity	SKU	MRP
3 L	5096	₹2150
1.5 L	5095	₹1870

5 year warranty



Compact Stainless Steel Cooker Outerlid 5 L with Glass Lid

Capacity	SKU	MRP
5 L	5093	₹3099
3 L	5092	₹2890
2 L	5091	₹2500
1.5 L	5090	₹2325

5 year warranty



Classic Curve Stainless Steel Cooker 5 L

Capacity	SKU	MRP
5 L	5073	₹3789
3 L	5072	₹2890

5 year warranty



Namo Stainless Steel Cooker Combo

5 L +3 L + 2 L Pressure Pan

SKU	MRP
5512	₹6535

Tri-Ply Series



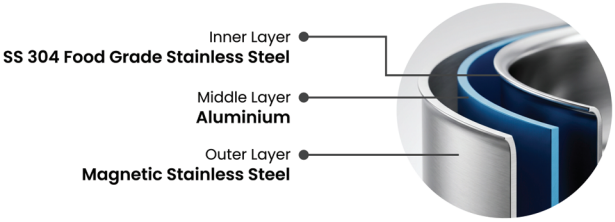

5 year warranty



Fusion Tri-Ply Pressure Cooker Combo

3 L + 2 L with Glass Lid

SKU	MRP
5528	₹5089

5 year warranty



Trinova Tri-Ply Pressure Cooker Combo

5 L + 3 L + 2 L

SKU	MRP
5532	₹6450

5 year warranty



Fusion Tri-Ply Pressure Cooker Combo

5 L + 3 L + 2 L with 2 Glass Lids

SKU	MRP
5527	₹8220

5 year warranty



Fusion Tri-Ply Pressure Cooker 5 L

Capacity	SKU	MRP
5 L	5077	₹3900
3 L	5076	₹3225
2 L	5075	₹2765
1.5 L	5109	₹2535
1 L	5108	₹2375

Evok Series

ISI Certified | High Grade Aluminium | Safety Valve | Gasket Release System | Bakelite Handle | Precision Weight Valve | ISO Certified Company

5 year warranty



Evok Cooker 12 L

Capacity	SKU	MRP
12 L	5024	₹3740
10 L	5023	₹3530

Hexagon Series

ISI Certified | High Grade Aluminium | Safety Valve | Gasket Release System | Bakelite Handle | Precision Weight Valve | ISO Certified Company

5 year warranty

INDUCTION COMPATIBLE



Hexagon IB Cooker 5 L

Capacity	SKU	MRP
5 L	5098	₹2789
3 L	5097	₹2189

5 year warranty



Pressure Pan

Capacity	SKU	MRP
4 L	5104	₹2105
6 L	5105	₹2715

Hexagon Cooker 5 L

Capacity	SKU	MRP
5 L	5079	₹2200
1.5 L	5099	₹1405
2 L	5100	₹1545
3 L	5078	₹1730
7.5 L	5101	₹3170
10 L	5102	₹3530
12 L	5103	₹3740

Namo Series

ISI Certified
High Grade Aluminium
Safety Valve
Gasket Release System
Bakelite Handle
Precision Weight Valve
ISO Certified Company

5 year warranty



Namo Cooker 5 L

Capacity	SKU	MRP
5 L	5002	₹2311
3 L	5001	₹1812

5 year warranty



Namo Inner Lid Cooker 5 L

Capacity	SKU	MRP
5 L	5006	₹1775
3 L	5005	₹1400

5 year warranty
INDUCTION COMPATIBLE



Namo IB Cooker 5 L

Capacity	SKU	MRP
5 L	5004	₹2425
3 L	5003	₹1945

5 year warranty
INDUCTION COMPATIBLE



Namo Inner Lid IB Cooker 5 L

Capacity	SKU	MRP
5 L	5043	₹2515
3 L	5007	₹2055

Hard Anodized Series

ISI Certified
High Grade Aluminium
Safety Valve
Gasket Release System
Bakelite Handle
Precision Weight Valve
ISO Certified Company

5 year warranty
INDUCTION COMPATIBLE

Strainer Lid
Easy Cook and Serve
Versatile Design



Unique Hard Anodized IB Cooker 5 L

Capacity	SKU	MRP
5 L	5012	₹5069
3 L	5011	₹4300

5 year warranty

INDUCTION COMPATIBLE



Hard Anodized IB Cooker 5 L

Capacity	SKU	MRP
5 L	5049	₹2520
3 L	5048	₹1870

5 year warranty



HAS Hard Anodized Steel Lid Cooker 5 L

Capacity	SKU	MRP
5 L	5065	₹3035
3 L	5064	₹2290

5 year warranty

INDUCTION COMPATIBLE



Castor Hard Anodized IB Inner Lid Cooker 5.5 L

Capacity	SKU	MRP
5.5 L	5056	₹3775
3 L	5055	₹3335
2 L	5085	₹3000

Stainless Steel Cookware

ISI Certified

Minimum Oil Cooking

High Quality Stainless Steel

1 year warranty



Stainless Steel Casserole 5000 ml

Capacity	SKU	MRP
5000 ml	6703	₹2219
3500 ml	6702	₹1999
2500 ml	6701	₹1615

1 year warranty



Fusion Stainless Steel Insulated Serving Casserole 1000 ml

Capacity	SKU	MRP
1000 ml	6732	₹1265
1500 ml	6733	₹1460
2500 ml	6734	₹1780

1 year warranty

INDUCTION COMPATIBLE



Idly Pot and Multi Steamer

SKU	MRP
6705	₹2109

1 year warranty
INDUCTION COMPATIBLE



Steeliq Stainless Steel 4pc Gift Set

Fry Pan 220 mm, Kadai 220 mm with Glass Lid, Sauce Pan 160 mm

SKU	MRP
6724	₹2815

1 year warranty
INDUCTION COMPATIBLE



Stainless Steel 3 in 1 Gift Set

SKU	MRP
6706	₹2465

1 year warranty
INDUCTION COMPATIBLE



Vesta Stainless Steel Idly Maker 6 Plates

Product	SKU	MRP
6 plate	6717	₹1870
4 plates	6718	₹1590

1 year warranty
INDUCTION COMPATIBLE



Steeliq Soft Touch 4pc Gift Set with Sandwich Bottom

(Fry Pan 220 mm, Kadai 220 mm with Glass Lid, Sauce Pan 160 mm)

SKU	MRP
6725	₹2525

1 year warranty



Choodarapetty 1 Kg

Capacity	SKU	MRP
1 Kg	6709	₹3989
1.5 Kg	6710	₹4745

1 year warranty
INDUCTION COMPATIBLE



Sauce Pan with Lid 1.5L

SKU	MRP
6715	₹655

1 year warranty



INDUCTION COMPATIBLE

Eco Stainless Steel Steamer 2.2 L with Glass Lid

SKU	MRP
6735	₹1030

Greenchef®

Zesto Cast-Iron Series

Rooted in tradition, built for flavor —
Greenchef Cast Iron Cookware adds authenticity,
taste, and health to every meal.



Zesto Cast-Iron Series

Pre-seasoned | Durable | No-Spill Edges | Superior Heat Retention



Zesto Cast Iron Dosa Tawa 280 mm

SKU	MRP
16002	₹2150



Zesto Cast Iron Dosa Tawa 300 mm

SKU	MRP
16003	₹2285



Zesto Cast Iron Concave Tawa/ Roti Tawa 260 mm

SKU	MRP
16059	₹2399



Zesto Cast Iron Kadai 240 mm with Glass Lid

SKU	MRP
16053	₹3425



Zesto Cast Iron Paniyarakal 7 Pits

SKU	MRP
16051	₹1835



Zesto Cast Iron Paniyarakal 12 Pits

SKU	MRP
16052	₹2749



Zesto Cast Iron Grill Pan

SKU	MRP
16041	₹2665

Greenchef®

Electric Rice Cookers

Rice made Right, every time — Greenchef Rice Cookers bring convenience, consistency, and comfort to your daily meals.



Electric Rice Cookers

Compact Design

Easy to Clean

Food Stays Warm

Auto Cut- Off Protection

NEW ARRIVAL

Stainless Steel Bowl

Available Colors



Steelar rice cooker 1.8 L

(Stainless Steel Single Bowl)

1.8L Capacity | **700W** Power | **3x** Thermal Protection

NEW ARRIVAL

Aluminium Bowl



Carlo ace jumbo rice cooker 6.6 L

(Aluminium Single Bowl)

6.6L Capacity | **2500W** Power | **3x** Thermal Protection

FREE Aluminium Bowl

Available Colors



Carlo Electric Rice Cooker 1.8 L

(Aluminium Double Bowl)

Capacity	SKU	MRP
1.8 L	27004	₹4878
2.8 L	27005	₹6400
1 L	27006	₹3989
0.6 L	27002	₹3511

5 year warranty heating plate

2 year warranty on product

700 Watts

Aluminium Bowl

Available Colors



5 year warranty heating plate
2 year warranty on product

Carlo Ace Electric Rice Cooker 1.8 L

(Aluminium Single Bowl)

SKU	MRP
27009	₹4235

300 Watts

Stainless Steel Bowl

Available Colors



5 year warranty heating plate
2 year warranty on product

Starc Ace Electric Rice Cooker 0.6 L

(Stainless Steel Single Bowl)

SKU	MRP
27011	₹3985

700 Watts

Stainless Steel Bowl

FREE Stainless Steel Steamer Tray



5 year warranty heating plate
2 year warranty on product

Comet Elite Electric Rice Cooker 1.8 L

(Stainless Steel Single Bowl with Steamer Tray)

SKU	MRP
27013	₹4399

700 Watts

Stainless Steel Bowl

Available Colors



5 year warranty heating plate
2 year warranty on product

Comet Electric Rice Cooker 1.8 L

(Stainless Steel Single Bowl)

SKU	MRP
27012	₹5225

1600 Watts

Aluminium Bowl



5 year warranty heating plate
2 year warranty on product

Carlo Ace Electric Rice Cooker 4.2 L

(Aluminium Single Bowl)

SKU	MRP
27014	₹10899

FREE Stainless Steel Bowl

Available Colors



5 year warranty heating plate
2 year warranty on product

Starc Electric Rice Cooker 2.8 L

(Stainless Steel & Double Bowl)

Capacity	SKU	MRP
2.8 L	27010	₹7249
1.8 L	27008	₹5989

Greenchef®

Tri-Ply Cookware

Crafted for performance and precision — Greenchef Tri-ply Cookware ensures even heating, durability, and professional results.



Tri-Ply Cookware

Dishwasher Safe
Even Heat Distribution
Durable
Metal Spoon Friendly
ISI Certified

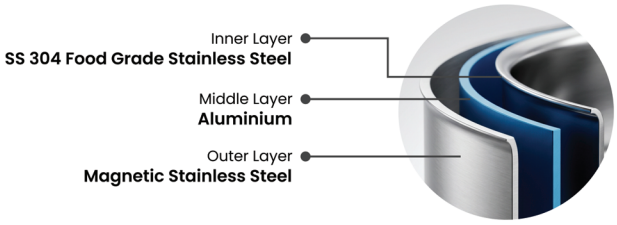

5 year warranty

All Cooktop Compatible



Fusion Tri-Ply Kadai with Glass Lid 320 mm

Capacity	SKU	MRP
320 mm	6832	₹4355
300 mm	6831	₹3845
280 mm	6830	₹3425
260 mm	6829	₹2915
240 mm	6828	₹2555
220 mm	6827	₹2345
200 mm	6826	₹2015
180 mm	6825	₹1789
160 mm	6824	₹1635

5 year warranty

All Cooktop Compatible



Fusion Tri-Ply Tope with Stainless Steel Lid 240 mm

Capacity	SKU	MRP
240 mm	6842	₹3275
220 mm	6841	₹2935
200 mm	6840	₹2480
180 mm	6839	₹1900
160 mm	6838	₹1625
140 mm	6837	₹1355

5 year warranty
All Cooktop Compatible



Fusion Tri-Ply Casserole with Glass Lid 240 mm

Capacity	SKU	MRP
240 mm	**6846**	**₹3500**
220 mm	6845	₹3200
200 mm	6844	₹2778
180 mm	6843	₹2478

5 year warranty
All Cooktop Compatible



Fusion Tri-Ply Langri with Stainless Steel Lid 240 mm

Capacity	SKU	MRP
240 mm	**6859**	**₹3389**
220 mm	6858	₹2870
200 mm	6857	₹2415

5 year warranty
All Cooktop Compatible



Fusion Tri-Ply Roti Tawa

SKU	MRP
6855	₹1900

5 year warranty
All Cooktop Compatible



Fusion Tri-Ply Rice Pot with Stainless Steel Lid 220 mm

Capacity	SKU	MRP
220 mm	**6851**	**₹2935**
200 mm	6850	₹2275
180 mm	6849	₹1935

5 year warranty
All Cooktop Compatible



Fusion Tri-Ply Belly Handi with Glass Lid 220 mm

Capacity	SKU	MRP
220 mm	**6854**	**₹3815**
200 mm	6853	₹3225
180 mm	6852	₹2765

5 year warranty
All Cooktop Compatible



Fusion Tri-Ply Sauce Pan with Glass Lid 160 mm

Capacity	SKU	MRP
160 mm	**6848**	**₹1925**
140 mm	6847	₹1665

5 year warranty

All Cooktop Compatible



Fusion Tri-Ply Tadka Pan

SKU	MRP
6856	₹956

5 year warranty

All Cooktop Compatible



Crest Tri-Ply Combo

(Kadai with GL 220mm, Fry Pan 220mm, Sauce Pan 140mm)

SKU	MRP
6821	₹5035

5 year warranty

All Cooktop Compatible



Fusion Tri-Ply Mini Kadai Set

NEW ARRIVAL

5 year warranty

All Cooktop Compatible



Fusion Tri-Ply Fry Pan with Glass Lid 240 mm

Capacity	SKU	MRP
240 mm	**6836**	**₹2415**
220 mm	6835	₹2055
200 mm	6834	₹1835

5 year warranty

All Cooktop Compatible



Fusion Tri-Ply Tasla Combo w/o Lid

260 mm, 240 mm, 220 mm, 200 mm, 180 mm, 160 mm

SKU	MRP
6833	₹8650

5 year warranty
All Cooktop Compatible
NEW ARRIVAL



Fusion Tri-Ply Saute Pan With Glass Lid

5 year warranty
All Cooktop Compatible
NEW ARRIVAL



Fusion Tri-Ply Hammered Deep Kadai With SS Lid

5 year warranty
All Cooktop Compatible
NEW ARRIVAL



Fusion Tri-Ply Deep Kadai With SS Lid

Tri-Ply Honeycomb Cookware

Dishwasher Safe
Even Heat Distribution
Durable
Metal Spoon Friendly
ISI Certified

5 year warranty
All Cooktop Compatible
NEW ARRIVAL
Honeycomb Non-Stick Coating



Fusion Tri-Ply Honeycomb Fry Pan with Glass Lid

5 year warranty
All Cooktop Compatible
NEW ARRIVAL
Honeycomb Non-Stick Coating



Fusion Tri- Ply Honeycomb Dosa Tawa 280mm

SKU	MRP
6951	₹2669

5 year warranty
All Cooktop Compatible
NEW ARRIVAL
Honeycomb Non-Stick Coating



Fusion Tri-ply Honeycomb Roti Tawa 250mm

SKU	MRP
6950	₹2999



Greenchef®

Non-Stick Cookware

Cook more, clean less — Greenchef Non-stick Cookware delivers effortless cooking with minimal oil and maximum ease.

Namo Series

ISI Certified

Metal Spoon Friendly

Cook Faster Save Energy

Strong Captivated Stainless Steel Forged Handle

1 year warranty

INDUCTION COMPATIBLE



Namo IB Fry Pan 240 mm

IB Capacity	SKU	MRP
240 mm	**6046**	**₹980**
280 mm	6047	₹1215

Non IB Capacity	SKU	MRP
240 mm	**6006**	**₹1200**
280 mm	6007	₹1455
200 mm	6042	₹650

1 year warranty

INDUCTION COMPATIBLE



Namo IB Kadai 230 mm with Stainless Steel Lid

IB Capacity	SKU	MRP
230 mm	**6043**	**₹1030**
240 mm	6044	₹890

Non IB Capacity	SKU	MRP
230 mm	**6004**	**₹1489**
260 mm	6005	₹1869

1 year warranty

INDUCTION COMPATIBLE



Namo IB Flat Tawa 250 mm

IB Capacity	SKU	MRP
250 mm	**6039**	**₹935**
310 mm	6041	₹1125
280 mm	6040	₹1030

Non IB Capacity	SKU	MRP
250 mm	**6001**	**₹955**
310 mm	6003	₹1335
280 mm	6002	₹1111

1 year warranty



Namo Paniyarakkal 12 Pits with SS Lid

SKU	MRP
6089	₹1165

1 year warranty



Tadka Pan

SKU	MRP
6038	₹350

Regal Series

ISI Certified

Metal Spoon Friendly

Cook Faster Save Energy

Strong Captivated Stainless Steel Forged Handle

1 year warranty

INDUCTION COMPATIBLE



Regal Biriyani Pot with Glass Lid 260 mm

Capacity	SKU	MRP
260 mm	**6104**	**₹2200**
240 mm	6103	₹1975
220 mm	6102	₹1665

1 year warranty

INDUCTION COMPATIBLE



Regal Flat Tawa IB 280 mm

Product	SKU	MRP
IB	**6093**	**₹1355**
Non -IB	6094	₹830

1 year warranty

INDUCTION COMPATIBLE



Regal Appachetty

SKU	MRP
6112	₹855

Gift Sets

ISI Certified

Metal Spoon Friendly

Cook Faster Save Energy

Strong Captivated Stainless Steel Forged Handle

1 year warranty



Twin Pack 2pc Non-Stick Gift Set

(Tawa 280mm, Kadai 230mm)

SKU	MRP
6505	₹1889

1 year warranty

INDUCTION COMPATIBLE



Astor IB Non-Stick 3pc Gift Set

(250 mm IB Tawa, 240 mm IB Fry pan, 240mm IB Kadai with Glass lid)

SKU	MRP
6525	₹2340

1 year warranty



INDUCTION COMPATIBLE

Trinity IB Non-Stick 3pc Gift Set

(280 mm IB Tawa, 240 mm IB Fry Pan, 240 mm IB Kadai with Glass lid)

SKU	MRP
6526	₹3056

1 year warranty



INDUCTION COMPATIBLE

Canvas IB 3pc Non-Stick Gift Set

(Tawa IB 250 mm, Fry Pan IB 240 mm, Kadai IB 240 mm with Glass Lid)

Colours	SKU	MRP
Black	6514	₹2890
Grey	6515	₹2890
Red	6513	₹2890

Greenchef®

Glasstop Gas Stoves

Where elegance meets efficiency — Greenchef Glass Top Gas Stoves add a modern touch while delivering powerful, reliable flame performance.



Glasstop Gas Stoves

ISI Certified | Toughened Glass | Sturdy Pan Support | 100% Brass Typhoon Burner | Metallic Knobs | Rubber Legs for Better Grip

2 year warranty on glass



Opal Double Burner Glasstop

SKU	MRP
1057	₹4220

2 year warranty on glass



Opal Triple Burner Glasstop

SKU	MRP
1069	₹6220

2 year warranty on glass



Opal Four Burner Glasstop

SKU	MRP
1072	₹8887

2 year warranty on glass



Bliss Double Burner Glasstop

SKU	MRP
1029	₹4644

2 year warranty on glass



Bliss Triple Burner Glasstop

SKU	MRP
1068	₹5733

2 year warranty on glass



Crystal Plus Double Burner Glasstop

SKU	MRP
1002	₹5233

5 year warranty on glass



Namo Triple Burner Glasstop

SKU	MRP
1005	7900

5 year warranty on glass



Namo Double Burner Glasstop

SKU	MRP
1004	₹5511

5 year warranty on glass



Elite Triple Burner Glasstop with Auto-Ignition

SKU	MRP
1007	₹9345

5 year warranty on glass



Elite Double Burner Glasstop with Auto-Ignition

SKU	MRP
1006	₹6655

5 year warranty on glass

Jumbo Burner



Orbit Double Burner Glasstop

SKU	MRP
1056	₹6156

5 year warranty on glass

Jumbo Burner



Orbit Triple Burner Glasstop

SKU	MRP
1045	₹7767

2 year warranty on glass

Jumbo Burner



Cleo Double Burner Glasstop

SKU	MRP
1013	₹5299

2 year warranty on glass

Jumbo Burner



Cleo Triple Burner Glasstop

SKU	MRP
1014	₹6799

5 year warranty on glass



Smart Triple Burner Glasstop

SKU	MRP
1027	₹6800

5 year warranty on glass



Trio Triple Burner Glasstop

SKU	MRP
1022	₹7069

2 year warranty on glass



Nexa Four Burner Glasstop

SKU	MRP
1020	₹7290

2 year warranty on glass

Jumbo Burner



Etica Four Burner Glasstop

SKU	MRP
1021	₹10545

5 year warranty on glass

Jumbo Burner



Zig Zag Four Burner Glasstop

SKU	MRP
1034	₹12711

5 year warranty on glass



Jazz Double Burner Glasstop

SKU	MRP
1052	₹6556

5 year warranty on glass



Jazz Triple Burner Glasstop

SKU	MRP
1053	₹9065

5 year warranty on glass



Jazz Four Burner Glasstop

SKU	MRP
1054	₹11425

7 year warranty on glass

Jumbo titan brass burner



Matte Double Burner Glasstop

SKU	MRP
1073	₹7600

7 year warranty on glass

Jumbo titan brass burner



Matte Triple Burner Glasstop

SKU	MRP
1074	₹9900

7 year warranty on glass

Jumbo titan brass burner



Matte Four Burner Glasstop

SKU	MRP
1075	₹12449

72% High Thermal Efficiency

2 year warranty on product

5 year warranty on burner

7 year warranty on glass



Magnum Double Burner Glasstop

SKU	MRP
1064	₹9399

72% High Thermal Efficiency

2 year warranty on product

5 year warranty on burner

7 year warranty on glass



Magnum Triple Burner Glasstop

SKU	MRP
1065	₹11889

72% High Thermal Efficiency

2 year warranty on product

5 year warranty on burner

7 year warranty on glass



Magnum Gold Double Burner Glasstop

SKU	MRP
1066	₹9399

72% High Thermal Efficiency

2 year warranty on product

5 year warranty on burner

7 year warranty on glass



Magnum Gold Triple Burner Glasstop

SKU	MRP
1067	₹11889

7 year warranty on glass



- Sturdy pan support
- Tornado burners direct blue flame
- Extra stainless steel drip tray
- Toughened glass



Stylo Double Burner Glasstop

SKU	MRP
1035	₹11855

7 year warranty on glass



- Sturdy pan support
- Tornado burners direct blue flame
- Extra stainless steel drip tray
- Toughened glass



Stylo Triple Burner Glasstop

SKU	MRP
1036	₹14899

NEW ARRIVAL

7 year warranty on glass



Jumbo titan brass burner

Zoro Double Burner Glasstop

6mm Toughened Glass

Stainless steel drip tray

NEW ARRIVAL

7 year warranty on glass



Jumbo titan brass burner

Zoro Triple Burner Glasstop

6mm Toughened Glass

Stainless steel drip tray

NEW ARRIVAL

7 year warranty on glass



Jumbo titan brass burner

Zoro Four Burner Glasstop

6mm Toughened Glass

Stainless steel drip tray

Greenchef®

Mixer Grinders, Juicers, and Blenders

Blend, grind, and create with ease — Greenchef appliances bring power and precision to your kitchen's every need.



Mixer Grinders

3-Speed Control
Automatic Overload Switch
Durable Top Cover
Shock Proof ABS Body
Virgin ABS Plastic
Stainless Steel Blades

2 year warranty on product
5 year warranty on motor
ISI Certified



Tulip Pro Mixer Grinder 600W - 2 Jars

SKU	MRP
4032	₹3199

2 year warranty on product
5 year warranty on motor
ISI Certified



Melon Mixer Grinder 600W - 3 Jars

SKU	MRP
4003	₹3399

2 year warranty on product
5 year warranty on motor
ISI Certified



Tulip Mixer Grinder 600W - 3 Jars

SKU	MRP
4025	₹4220

2 year warranty on product
5 year warranty on motor
ISI Certified
Available Colors



Focal Mixer Grinder 600W - 3 Jars

SKU	MRP
4030	₹4220

2 year warranty on product
5 year warranty on motor
ISI Certified



Majesto Mixer Grinder 600W- 3 Jars

SKU	MRP
4040	₹4220

2 year warranty on product
5 year warranty on motor
ISI Certified
Available Colors



Spark Mixer Grinder 600W - 3 Jars

SKU	MRP
4039	₹3749

2 year warranty on product
5 year warranty on motor
ISI Certified



Lark Mixer Grinder 550W - (2 Jars + 2 Bullet Jars)

SKU	MRP
4036	₹4249

2 year warranty on product
5 year warranty on motor
ISI Certified



Thunder Bolt Mixer Grinder 600W - 3 Jars

SKU	MRP
4028	₹4250

2 year warranty on product
5 year warranty on motor
ISI Certified
Available Colors



Strobe Pro Mixer Grinder 600W - 3 Jars

SKU	MRP
4037	₹4770

2 year warranty on product
5 year warranty on motor
ISI Certified



Ripple Mixer Grinder 750W - 3 Jars

SKU	MRP
4031	₹5665

2 year warranty on product
5 year warranty on motor
ISI Certified



Planet Mixer Grinder 1HP - 3 Jars

SKU	MRP
4020	₹5559

2 year warranty on product
5 year warranty on motor
ISI Certified



Kappa Mixer Grinder 1HP - 3 Jars

SKU	MRP
4011	₹5099

2 year warranty on product
5 year warranty on motor
ISI Certified



Mercury Mixer Grinder 1HP - 3 Jars

SKU	MRP
4006	₹6665

2 year warranty on product
5 year warranty on motor
ISI Certified



Ripple Pro Mixer Grinder 750W - 4 Jars

SKU	MRP
4041	₹6665

2 year warranty on product
5 year warranty on motor
ISI Certified
Available Colors



Constance Mixer Grinder 1HP - 3 Jars

SKU	MRP
4019	₹7110

2 year warranty on product
5 year warranty on motor
ISI Certified
Available Colors



Flen Mixer Grinder 1HP - 3 Jars

SKU	MRP
4007	₹7999

2 year warranty on product
5 year warranty on motor
ISI Certified



Mercury Plus Mixer Grinder 1HP - 4 Jars

SKU	MRP
4008	₹8220

2 year warranty on product
5 year warranty on motor
ISI Certified



Flen Plus Mixer Grinder 1HP - 4 Jars

SKU	MRP
4010	₹9445

2 year warranty on product
5 year warranty on motor
ISI Certified



Spectrum Mixer Grinder 750W - 3 Jars

SKU	MRP
4033	₹5499

2 year warranty on product
5 year warranty on motor
ISI Certified



Spectrum Plus Mixer Grinder 750W
(3 Jars + 2 Bullet Jars)

SKU	MRP
4034	₹6199

2 year warranty on product
5 year warranty on motor
ISI Certified



Spectrum Pro Mixer Grinder 750W
(3 Jars + 1 Juicer Jar + 1 Bullet Jar)

SKU	MRP
4035	₹6599

2 year warranty on product
5 year warranty on motor
ISI Certified
Available Colors



Crush Mixer Grinder 750W - 3 Jars

SKU	MRP
4042	₹6299

2 year warranty on product
5 year warranty on motor
ISI Certified
Available Colors



Crush Plus Mixer Grinder 750W
(3 Jars + 1 Juicer Jar)

SKU	MRP
4043	₹7299

2 year warranty on product
5 year warranty on motor
ISI Certified
Available Colors



Crush Pro Mixer Grinder 750W
(3 Jars + 1 Juicer Jar + 1 Bullet Jar)

SKU	MRP
4044	₹7499

2 year warranty on product
5 year warranty on motor
ISI Certified



Jawa Mixer Grinder 600W - 3 Jar

SKU	MRP
4026	₹3499

2 year warranty on product
5 year warranty on motor
ISI Certified



Aries Mixer Grinder 600W - 3 Jar

SKU	MRP
4045	₹3749

2 year warranty on product
5 year warranty on motor
ISI Certified



Misty Mixer Grinder 600W - 4 Jar
(3 Jars + 1 Juicer Jar)

SKU	MRP
4046	₹4899

Juicers

3-Speed Control | Automatic Overload Switch | Durable Top Cover | Shock Proof ABS Body | Stainless Steel Blades

2 year warranty on product

ISI Certified



Powermatic Juicer Mixer Grinder 500W

SKU	MRP
14003	₹4999

2 year warranty on product

ISI Certified



Dynamix Juicer Mixer Grinder 500W

SKU	MRP
14004	₹4499

Blenders

3-Speed Control | Automatic Overload Switch | Shock Proof ABS Body | Virgin ABS Plastic | Stainless Steel Blades

2 year warranty on product

Available Colors



ISI Certified

Compact Design

Easy to Clean

Nutri Smash Blender 400W

SKU	MRP
14406	₹3349

2 year warranty on product

ISI Certified

Blender Holder | Stainless Steel Rod | Easy to Clean | Changeable Stainless Steel blades



Portable Arrow Blender 280W

SKU	MRP
14405	₹2415

Wet Grinders

2 year warranty on product

Available Colors

ISI Certified



Virgin ABS Body



Detachable Drum with Poly-Carbonate Lid



Fast & Efficient Scrapper



High Quality Grinding Stone



Turbo Jet Wet Grinder 2L

SKU	MRP
4501	₹8115

Greenchef®

Stainless Steel LPG Stoves

Engineered for performance and durability — Greenchef Stainless Steel LP Gas Stoves bring lasting shine and effortless cooking to every kitchen.



Stainless Steel LPG Stoves

Extra-Wide Body
Sturdy Stainless Steel Body
Easy to Clean
ISI Certified
Brass Burners for even heat distribution
Sturdy Pan Support
ISO Certified Company

2 year warranty



Bachelor Single Burner Gas Stove

SKU	MRP
2001	2389

2 year warranty



Shakti Double Burner Gas Stove

SKU	MRP
2019	₹3278

2 year warranty



Super Slim Double Burner Gas Stove

SKU	MRP
2008	₹3775

2 year warranty



Turbo Double Burner Gas Stove

SKU	MRP
2006	₹3599

2 year warranty



Economy Double Burner Gas Stove

SKU	MRP
2002	₹4189

2 year warranty



Economy Pro Double Burner Gas Stove with Steel Pan Support

SKU	MRP
2018	₹4500

2 year warranty

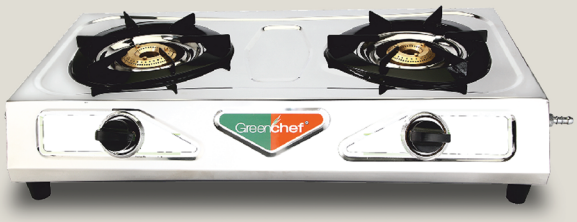

Chandini Double Burner Gas Stove

SKU	MRP
2003	₹5125

2 year warranty



Milano Double Burner Gas Stove

SKU	MRP
2005	₹5289

2 year warranty

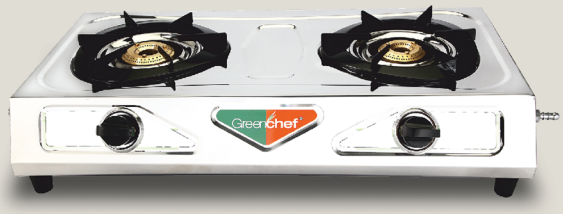

Chandini Double Burner Gas Stove with Auto-Ignition

SKU	MRP
2004	₹5845

2 year warranty

Jumbo Burner



Fiesta Double Burner Gas Stove

SKU	MRP
2010	₹5400

2 year warranty

Jumbo Burner



Fiesta Single Burner Gas Stove

SKU	MRP
2009	₹2999

2 year warranty

Jumbo Burner



Fiesta Triple Burner Gas Stove

SKU	MRP
2011	₹7799

2 year warranty



Slim Triple Burner Gas Stove

SKU	MRP
2007	₹7335

7 year warranty

68% High Thermal Efficiency

NEW ARRIVAL



PrimeX Double Burner Gas Stove

SKU	MRP
2024	₹13999

2mm stainless steel body

Stainless steel drip tray

7 year warranty

68% High Thermal Efficiency

NEW ARRIVAL



PrimeX Triple Burner Gas Stove

SKU	MRP
2025	₹17999

2mm stainless steel body

Stainless steel drip tray

7 year warranty

68% High Thermal Efficiency

NEW ARRIVAL



PrimeX Four Burner Gas Stove

SKU	MRP
2026	₹21499

2mm stainless steel body

Stainless steel drip tray



Greenchef®

Digital Air Fryer

Crisp outside, tender inside — Greenchef Air Fryers redefine healthy cooking with precision heat and minimal oil for guilt-free indulgence.

Digital Air Fryer

2 year warranty

ISI Certified

1200 Watts

4.2 Litres



Frizzle Digital Air Fryerr

Demo Video

SKU	MRP
23506	₹6560

Fry · Defrost · Bake · Roast · Grill

2 year warranty

ISI Certified

1800 Watts

12 Litres



Sizzle Digital Air Fryer Oven

SKU	MRP
23511	₹17525

Programmable Timer · 360° High Speed Air Circulation Technology · Digital Touch Display · Ten Preset Menu

2 year warranty

ISI Certified

1200 Watts

25 Litres



Duo Air Fryer and Oven with Rotisserie

SKU	MRP
23512	₹14659

Fry · Defrost · Bake · Roast · Grill

Greenchef®

Oven Toast Grill (OTG)

Bake, Grill and toast with perfection - Greenchef OTGs offer versatile cooking convenience for every craving.



Oven Toast Grill (OTG)

Temperature 100°-250°
Ready Bell & Auto Shut Off
Cool-Touch Handle
Heat Resistant Tempered Glass Window
Mild Stainless Steel Body with Black Powder Coating
ISI Certified

9 Litres — 2 year warranty



Oven, Toaster, Grill

SKU	MRP
23507	₹4459

14 Litres — 2 year warranty



Oven, Toaster, Grill

SKU	MRP
23514	₹5335

20 Litres — 2 year warranty



Oven, Toaster, Grill with Rotisserie Function

SKU	MRP
23508	₹8449

30 Litres — 2 year warranty



Oven, Toaster, Grill with Rotisserie & Convection Function

SKU	MRP
23509	₹12669

40 Litres — 2 year warranty



Oven, Toaster, Grill with Inner Lamp, Rotisserie & Convection Function

SKU	MRP
23510	₹14449

Greenchef®

Induction Cooktop

Smart, sleek, and energy-efficient — Greenchef Induction Cooktops make modern cooking faster, safer, and more precise.



Induction Cooktop

8 Preset Menu | Child Lock | Feather Touch | Quick Heating | Digital Display | Easy to Clean

1 year warranty
Available Colors
1800 Watts



Ember Induction Cooktop

SKU	MRP
7019	₹3775

1 year warranty
On Product & Glass
Works With All Cookware
2200 Watts

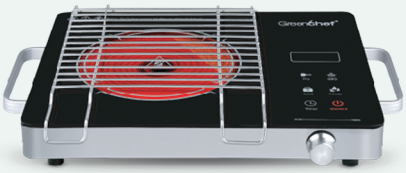

Electra Infrared Induction Cooktop

(Grilling, Barbecue, Frying & Boiling)

SKU	MRP
7021	₹6664

1 year warranty
2000 Watts



Dice Induction Cooktop with Touch Panel

SKU	MRP
7017	₹3749

1 year warranty
On Product & Glass
Works With All Cookware
2200 Watts



Jawa Pro Infrared Induction Cooktop

(Grilling, Barbecue, Frying & Boiling)

SKU	MRP
7022	₹6220

1 year warranty
2000 Watts



Pearl Induction Cooktop with Touch Panel

SKU	MRP
7020	₹3799

1 year warranty
2000 Watts



Galaxy Induction Cooktop

SKU	MRP
7023	₹4669

3500 Watts

1 year warranty
On Product & Glass

India's First Dual Infrared Cooktop

Works With All Cookware



Rapid Duo Dual Infrared Induction Cooktop

SKU	MRP
7027	₹16699

PA66 Polyamide 66 Body

Rotary Knob Control

Feather Touch Controls

LED Display for Easy Monitoring

Digital Timer for Precise Cooking

Variable Power & Temperature Control

Commercial Induction Cooktop

1 year warranty

3500 Watts

Heavy-Duty Steel Body



Bolt Commercial Induction Cooktop

SKU	MRP
7025	₹21000

1 year warranty

Works With All Cookware

3500 Watts

Rotary Knob Control

Heavy-Duty Steel Body



Vector Commercial Infrared Induction Cooktop

SKU	MRP
7024	₹21990

Greenchef®

Kettles & Multi Kettles

Quick boiling, smart design — Greenchef Kettles bring speed and style to your daily tea, coffee, and instant meals.



Kettles & Multi Kettles

Cool-Touch Handle | Variable Temperature Control | Indicates When Switched On | Easy to Clean Wide Mouth | ISI Certified

1350 Watts | 1 year warranty



Aura Glass Kettle 1.8 L

SKU	MRP
23013	₹2335

1350 Watts | 1 year warranty | Available Colors



Glitter Stainless Steel Kettle 1.8 L (Double Wall)

Colour	SKU	MRP
red	23010	₹1750
Blue	23014	₹1750

1350 Watts | 2 year warranty



Swift Stainless Steel Kettle 1.5 L

SKU	MRP
23006	₹1250

600 Watts | 1 year warranty | Available Colors



Zylo Mutipurpose Kettle 1.5L

SKU	MRP
23012	₹2460

600 Watts | 1 year warranty | Available Colors



Zylo Pro Mutipurpose Kettle 1.5L With Steamer

SKU	MRP
23011	₹2925

600 Watts | 1 year warranty



Multipurpose Kettle 1.2 L

SKU	MRP
23004	₹2249

NEW ARRIVAL

1350 Watts



Niva Stainless Steel Kettle 1.5 L

Available Colors

Greenchef®

Dry Irons

Smooth performance every time — Greenchef Dry Irons ensure crisp, wrinkle-free clothes with easy handling and consistent heat.



Dry Irons

ISI Certified

Unique Temperature Control

1200 WATTS Power

Power Indicator

Non-Stick Sole Plate

2 year warranty



Dry Iron D 108

Colour	SKU	MRP
Blue	**11009**	**₹799**
Grey	11010	₹799

2 year warranty



Dry Iron D 107

SKU	MRP
11008	₹1056

2 year warranty

Available Colors



Dry Iron Hanno

SKU	MRP
11012	₹1399

2 year warranty

900 Grams



Dry Iron Zeta Ultra Weight

SKU	MRP
11011	₹1499

2 year warranty



Dry Iron D 407

SKU	MRP
11003	₹1449

2 year warranty



Dry Iron Heavy Weight D 907

SKU	MRP
11004	₹2111

Greenchef®

Room Heaters

Stay cozy when the temperature drops — Greenchef Room Heaters bring quick warmth with safety, comfort, and style.



Room Heaters

2000 Watts | 1 year warranty



Glaze
Portable Fan Heater

SKU	MRP
10005	₹1399

2000 Watts | 1 year warranty



Aero Heat
Portable Fan Heater

SKU	MRP
10007	₹1899

2000 Watts | 1 year warranty



Blaze
Portable Fan Heater

SKU	MRP
10006	₹1599

800 Watts | 1 year warranty



Heat Pair
Quartz Room Heater

SKU	MRP
10009	₹2499

1200 Watts | 1 year warranty



Lava DLX
Halogen Room Heater

SKU	MRP
10010	₹3399

800 Watts | 1 year warranty



HeatX Sun
Heater

SKU	MRP
10011	₹3299

Greenchef®

Kitchen Utilities

Smartly designed for modern kitchens — Greenchef Kitchen Utilities combine functionality, durability, and elegant design to make everyday cooking effortless. From convenient storage to practical kitchen essentials, experience greater efficiency and ease in every task.



Coffee Maker

600 Watts

1 year warranty



Brewin
Drip Coffee Maker 600 mL

SKU	MRP
23513	₹2815

Lunch Box

1 year warranty



Double Insulated Walls

Spill Proof Lunch Box

Easy to Clean

Sizzle Stainless Steel Insulated Lunch Box - Pack of 3

Pack	SKU	MRP
3	6902	₹1300
2	6901	₹1100

Vegetable Choppers

3 Stainless Steel Blades

15 Cuts in Single Pull

PULL TAB HORIZONTALLY

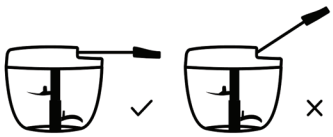

6 months warranty



Handy Chopper Mini 450 ml

Size	SKU	MRP
Mini 450 ml	24007	₹499
XL 950 ml	24008	₹675

90 days warranty



Mini Pro Vegetable Chopper 650 ml

SKU	MRP
24011	₹375

90 days warranty



XL Pro Vegetable Chopper 950 ml

SKU	MRP
24015	₹749

Rechargeable Portable Chopper & Blender

1 year warranty | 30 Watts | 350ml Capacity

Available Colors



Chopster Wireless Electrical mini vegetable chopper

Colour	SKU	MRP
Green	24018	₹1325
Grey	24019	₹1325

1 year warranty | 40 Watts | 300ml Capacity

Available Colors



Pulse Wireless Portable Blender

Colour	SKU	MRP
Red	14407	₹1999
Blue	14408	₹1999
Pink	14409	₹1999

Knife sets

1 year warranty



100% Steel

Glitz Stainless Steel Knife 3pcs Set

SKU	MRP
24016	₹199

1 year warranty



Culter Stainless Steel Knife 3pcs Set

SKU	MRP
24012	₹400

1 year warranty

Available Colors



Flora Trio Stainless Steel Knife 3pcs Set

SKU	MRP
24017	₹799

Elite Flora Stainless Steel Knife 3pcs Set

SKU	MRP
24013	₹1225



1 year warranty

Elite Edge Carbon Kitchen Knife 6pcs Set

SKU	MRP
24014	₹2150



1 year warranty

Kitchen Accessories

1 year warranty

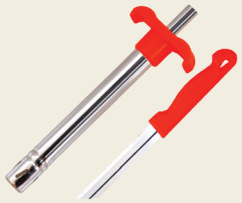

Gas Lighter with Knife (Stainless Steel)

SKU	MRP
12001	₹199

1 year warranty



Agni-1 Kitchen Gas Lighter

SKU	MRP
12002	₹299

1 year warranty



-With Japan double piezo element
-Instant spark

Agni-2 Gas Lighter with Knife -Pack of 2 (Stainless Steel)

SKU	MRP
12003	₹300

5 year warranty

ISI Certified



1.5M Steel Wire Enforced

Rat-Bite Proof

LPG Hose Pipe

SKU	MRP
9001	₹325

Mops

- 4 Wheels
- Bucket Handle for Easy Lifting
- Dirty Water Outlet
- Adjustable Mop Handle
- 1 Free Microfiber Head Inside
- Spin Dry
- Extra Absorbent Microfibers
- Steel Rod for Easy Movement

6 months warranty



Spin Mop with Bucket Set

SKU	MRP
9501	₹2249

6 months warranty



Zippy Mop

SKU	MRP
9502	₹1775

Greenchef®

Hob Top

Luxury and performance combined — Greenchef Hob Tops bring a seamless cooking experience with precision flame control and modern aesthetics.



Hob Top

Sturdy Pan Support

Toughened Glass for Durablility

Innovative Legs for Firmer Grip

Jumbo Burner for Faster Cooking

Auto Ignition

5 year warranty



Opera Triple Burner Hob Top

SKU	MRP
21010	₹18199

Product Size 710x510 mm

Cut Size 650x470 mm

5 year warranty



Opera Four Burner Hob Top

SKU	MRP
21011	₹20900

Product Size 710x510 mm

Cut Size 650x470 mm

5 year warranty



Kelvin Triple Burner Hob top

SKU	MRP
21001	₹19799

Product Size 710x510 mm

Cut Size 650x470 mm

5 year warranty



Kelvin Four Burner Hob top

SKU	MRP
21002	₹21559

Product Size 710x510 mm

Cut Size 650x470 mm

7 year warranty on glass **2** year warranty on burner **1** year warranty on product



Stella Triple Burner Hob Top

SKU	MRP
21009	₹26699

Product Size 710x510 mm

Cut Size 650x470 mm

7 year warranty on glass **2** year warranty on burner **1** year warranty on product



Stella Four Burner Hob Top

SKU	MRP
21007	₹29099

Product Size 710x510 mm

Cut Size 650x470 mm

7 year warranty on glass **2** year warranty on burner **1** year warranty on product



Stella Luxurious Four Burner Hob Top

SKU	MRP
21008	₹35599

Product Size 900x530 mm

Cut Size 815x462 mm

5 year warranty on glass **2** year warranty on burner **1** year warranty on product

Flame Failure Device

Smart Timer for Precision Cooking

Jumbo Burner



Zentro Smart Triple Burner Hob Top with Flame Failure Device

SKU	MRP
21012	₹25599

Product Size 710x510 mm

Cut Size 650x470 mm

5 year warranty on glass **2** year warranty on burner **1** year warranty on product

Flame Failure Device

Smart Timer for Precision Cooking

Jumbo Burner



Zentro Smart Four Burner Hob Top with Flame Failure Device

SKU	MRP
21013	₹30999

Product Size 710x510 mm

Cut Size 650x470 mm

Greenchef®

Chimneys

Breathe freshness into your kitchen — Greenchef Chimneys combine powerful suction with elegant design for a clean, odor-free space..



Chimneys

Akeno Pro 60 cm

SKU	MRP
21517	₹11350



Baffle Filter for Smoke Free Cooking

1050 M³/HR
Suction Power

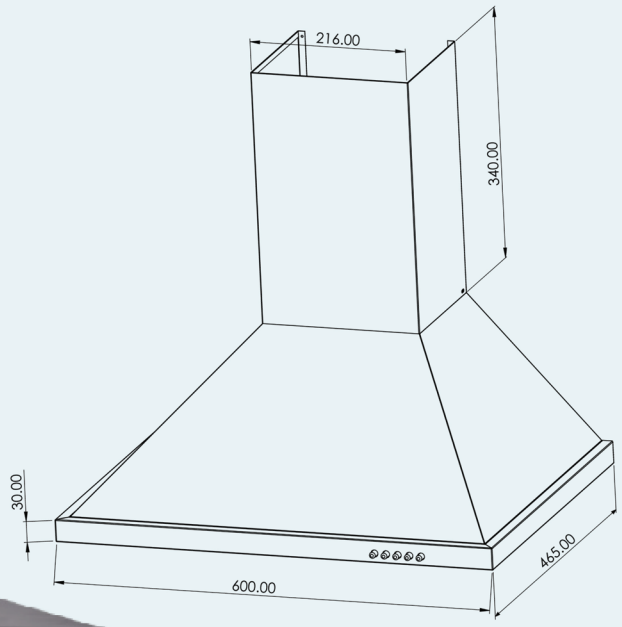

High Performance Motor

LIMITED LIFETIME
Limited Lifetime Warranty

Black Pearl Pro 60 cm

Sizes	SKU	MRP
60 cm	21524	₹22225
90 cm	21532	₹24999

Motion-Sensor and Touch Control

1550 M³/HR
Suction Power

Filter-less Technology



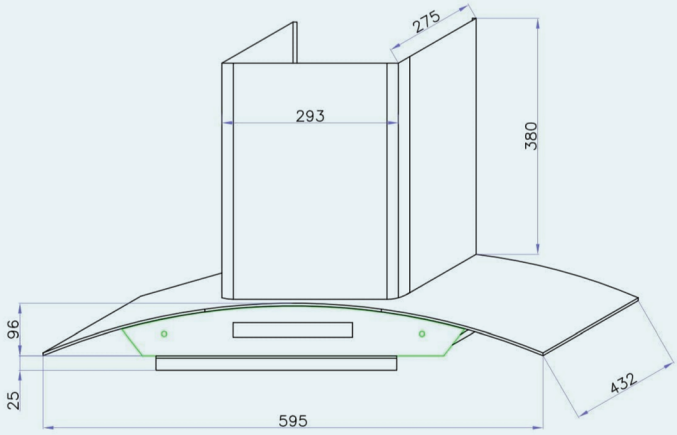

High Performance Motor

Easy to Clean

LIMITED LIFETIME
Limited Lifetime Warranty

Jasper Pro 60 cm

Sizes	SKU	MRP
60 cm	21542	₹22299
90 cm	21543	₹24499

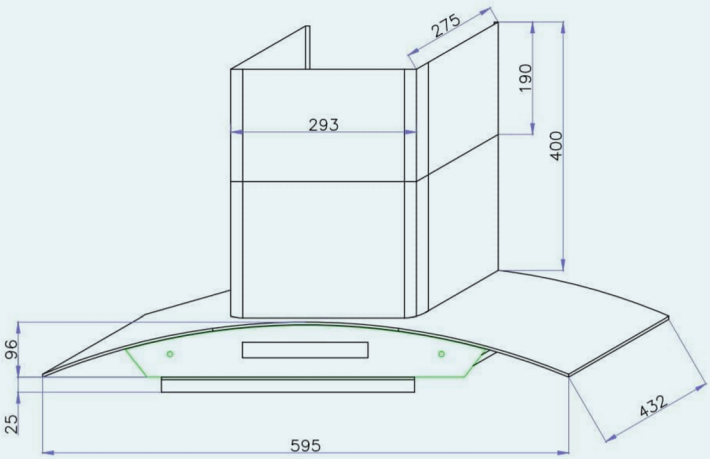



1650 M³/HR
Suction Power

Filter-less Technology

Low Noise Operation

Motion-Sensor and Touch Control

Limited Lifetime Warranty

Intelligent Auto Clean

Stylish & Premium Design

High Performance Motor

3- Speed Control

Taurus 60 cm

Sizes	SKU	MRP
60 cm	21527	₹27999
90 cm	21528	₹30499

Low Noise Operation

Limited Lifetime Warranty

Intelligent Auto Clean

Stylish & Premium Design

High Performance Motor

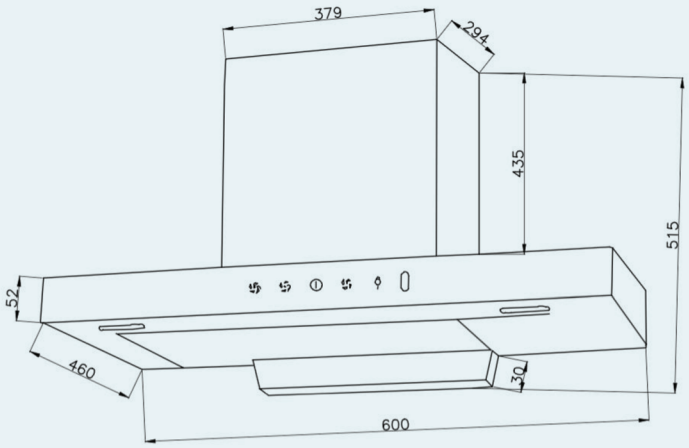

Motion-Sensor and Touch Control

Filter-less Technology

1550 M³/HR
Suction Power

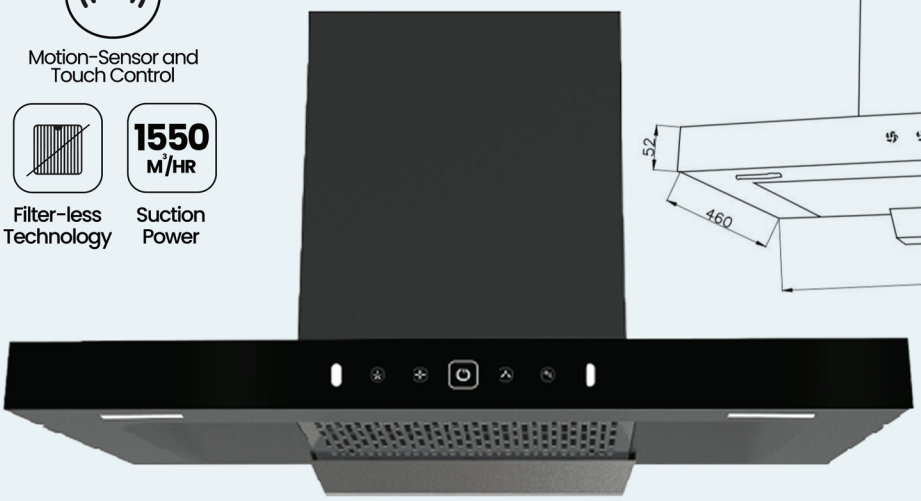

Luma 60 cm

Sizes	SKU	MRP
60 cm	21537	₹27775
90 cm	21538	₹31109



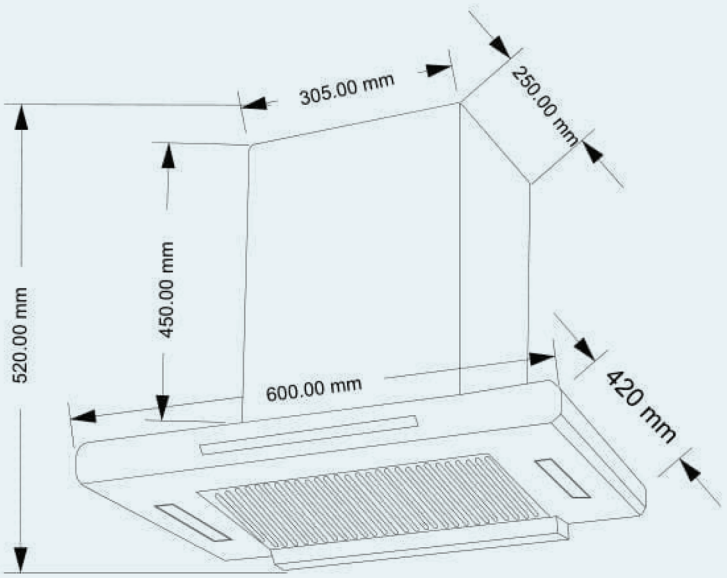

- 1550 M³/HR Suction Power
- Filter-less Technology
- Low Noise Operation
- Motion-Sensor and Touch Control
- Limited Lifetime Warranty
- Intelligent Auto Clean
- Stylish & Premium Design
- High Performance Motor

Luma Pro 60 cm

Sizes	SKU	MRP
60 cm	21544	₹29299
90 cm	21545	₹32899

- Low Noise Operation
- Motion-Sensor and Touch Control
- Limited Lifetime Warranty
- Intelligent Auto Clean
- Stylish & Premium Design
- BLDC Motor

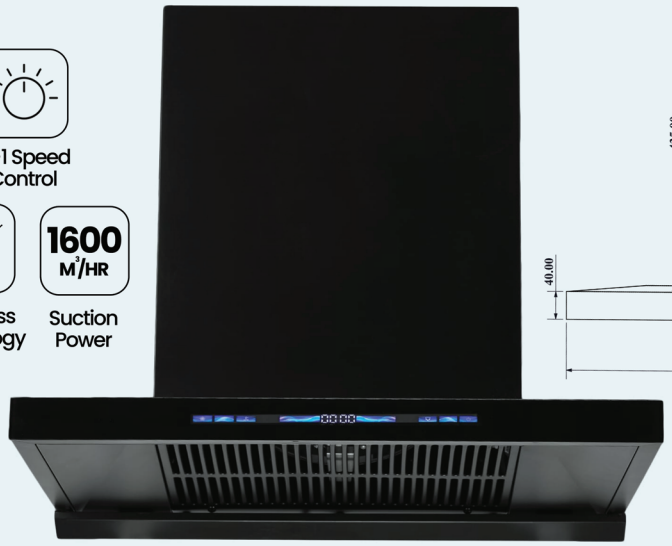

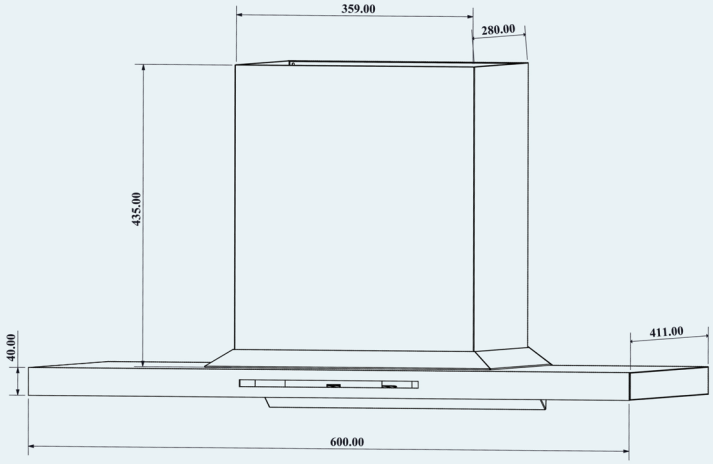

- 9+1 Speed Control
- Filter-less Technology
- 1600 M³/HR Suction Power

Zylo Prime 60 cm

Sizes	SKU	MRP
60 cm	21539	₹30445
90 cm	21540	₹33335



9 Speed Control

2000 M³/HR
Suction Power

BLDC Motor

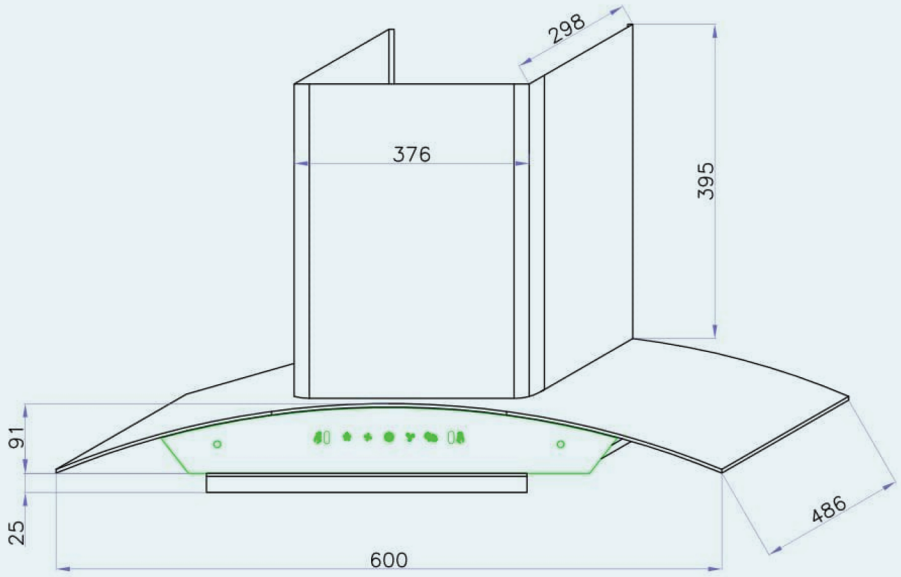

Filter-less Technology

Intelligent Auto Clean

Low Noise Operation with multiple speed options

High Performance Motor

LIMITED LIFETIME
Limited Lifetime Warranty

Stylish & Premium Design

Oris 60 cm

Sizes	SKU	MRP
60 cm	21535	₹31109
90 cm	21536	₹34445



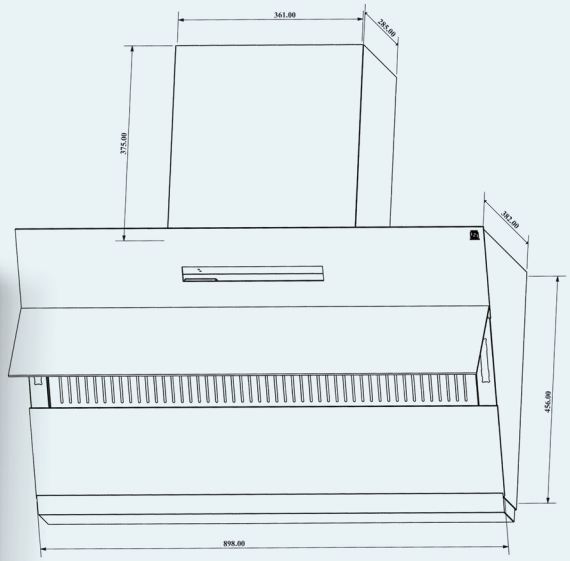

1550 M³/HR
Suction Power

Filter-less Technology

Low Noise Operation

Motion-Sensor and Touch Control

Limited Lifetime Warranty

Intelligent Auto Clean

Stylish & Premium Design

High Performance Motor

Oris Pro 60 cm

Sizes	SKU	MRP
60 cm	21546	₹32699
90 cm	21547	₹35999

Motion-Sensor and Touch Control

Intelligent Auto Clean

BLDC Motor

9 +1 Speed Control

Filter-less Technology

1600 M³/HR
Suction Power



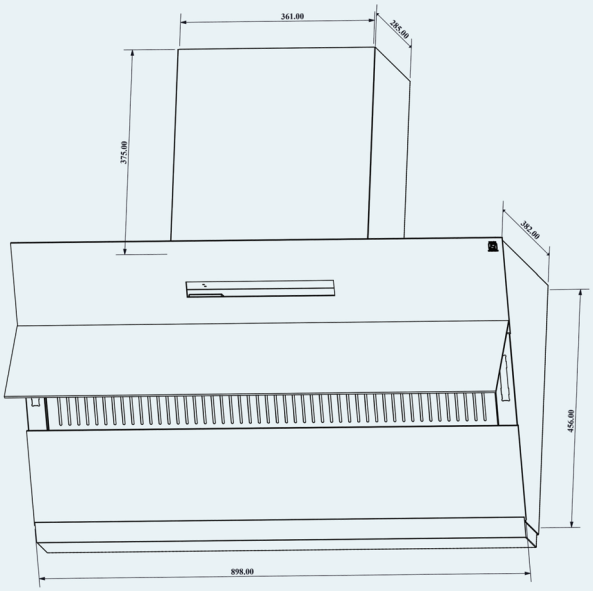

Greenchef®

Fans

Cool comfort ,anytime—
Greenchef Fans deliver powerful airflow with quiet, energy-efficient performance for every space



Ceiling Fans

2 year warranty on motor

Available Colors



Fronx Deco 48”

SKU	MRP
15020	₹2599

2 year warranty on motor

52 Watts

400 RPM

Available Colors



Tezz Pro 48”

SKU	MRP
15023	₹2199

2 year warranty on motor

52 Watts

400 RPM

Available Colors



Panther 48”

Size	SKU	MRP
48”	15015	₹2199
36”	15018	₹2099

3 year warranty on motor

52 Watts

400 RPM

Available Colors

100% Copper heavy duty motor



Orra 48”

SKU	MRP
15012	₹2699

2 year warranty on motor

52 Watts

400 RPM

Available Colors



Orra Classic Deco 48”

SKU	MRP
15013	₹2999

2 year warranty on motor

65 Watts

750 RPM



Turbo 24” (4 Blade Ceiling Fan)

SKU	MRP
15003	₹1999

Available Colors

Table Fans

2 year warranty on motor

2200 RPM



Desire High Speed 12”

Size	SKU	MRP
12”	15317	₹2990
9”	15316	₹2690

2 year warranty on motor

1400 RPM

Available Colors

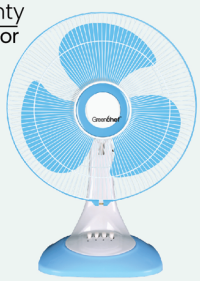

Raft

SKU	MRP
15312	₹3499

2 year warranty on motor

2200 RPM

Available Colors



High Air High Speed

SKU	MRP
15311	₹3999

1 year warranty

75 Watts

2200 RPM



Buzz Multipurpose Fan

MULTI-PURPOSE

Table fan Wall fan

SKU	MRP
15320	₹1899

Pedestal Fans

2 year warranty on motor



1400 RPM

Available Colors

Super Flow

SKU	MRP
15309	₹4199

2 year warranty on motor



2200 RPM

Available Colors

Drift High Speed

SKU	MRP
15308	₹4399

2 year warranty on motor

1350 RPM



Velocity 18”

SKU	MRP
15310	₹7999

2 year warranty on motor

2200 RPM

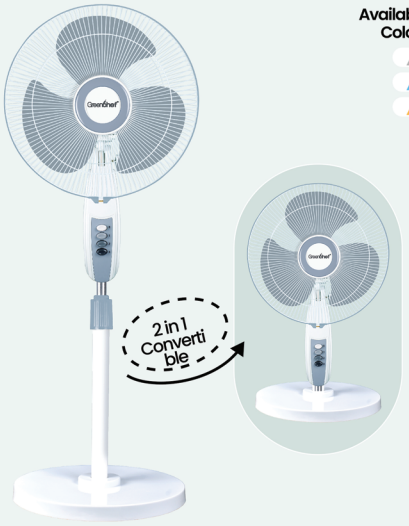

Flexi Breeze High Speed

SKU	MRP
15307	₹4099

Farrata Fan

2 year warranty on motor

1400 RPM



High Wind 20”

SKU	MRP
15521	₹5999

2 year warranty on motor

2400 RPM



Air Strom Bullet

Type	SKU	MRP
w/o Oscillation	15321	₹3199
With Oscillation	15323	₹3599

Cabin Fan

2 year warranty on motor

2200 RPM



Cabin Cool High Speed 12"

SKU	MRP
15319	₹2899

Desk Fan

2 year warranty on motor

2200 RPM



Liva High Speed 12"

SKU	MRP
15318	₹1999

Wall Fan

2 year warranty on motor

2200 RPM

Available Colors



Air Swing High Speed

SKU	MRP
15315	₹4399

Tower Fan

2 year warranty on motor

1400 RPM

Available Colors

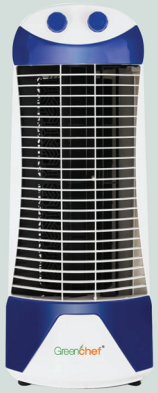

Tulip Air

SKU	MRP
15518	₹5999

Ventilation Fans

2 year warranty on motor

1800 RPM



Wave Axial High Speed 6”

SKU	MRP
15510	₹1299

2 year warranty on motor

2600 RPM



Fresco Fresh Air High Speed 6”

SKU	MRP
15513	₹1599

2 year warranty on motor

1350 RPM



Ero Fresh Air 12”

Size	SKU	MRP
12”	15512	₹1899
9”	15511	₹1399

2 year warranty on motor

1350 RPM



Vento 8”

Size	SKU	MRP
8”	15507	₹1999
6”	15506	₹1799

2 year warranty on motor

2400 RPM

Reversible flow switch



Fresco High Speed 12”

Size	SKU	MRP
12”	15515	₹1899
9”	15514	₹1799

2 year warranty on motor

1800 RPM

Available Colors



Cute High Speed 6” Axial Fan

SKU	MRP
15520	₹1999

2 year warranty on motor

1900 RPM



Gusto High Speed 8”

Size	SKU	MRP
8”	15509	₹2199
6”	15508	₹1999

Greenchef®

Immersion Rod

Instant warmth, lasting reliability — Greenchef immersion rod provide efficient heating for cosy comfort in every season.



Immersion Rod

2 year warranty

ISI Certified



Splash Immersion Water Heater 1500W

Capacity	SKU	MRP
1500W	**13027**	**₹999**
1000W	13026	₹899
2000W	13029	₹1199

2 year warranty

ISI Certified



Thermox Immersion Water Heater 1500W

Capacity	SKU	MRP
1500W	**13031**	**₹1099**
1000W	13030	₹999
2000W	13032	₹1299

Greenchef®

HIGH QUALITY INNOVATIVE HOME AND KITCHEN APPLIANCES

WWW.GREENCHEF.IN

SCAN TO VIEW GREENCHEF'S INSTAGRAM PROFILE